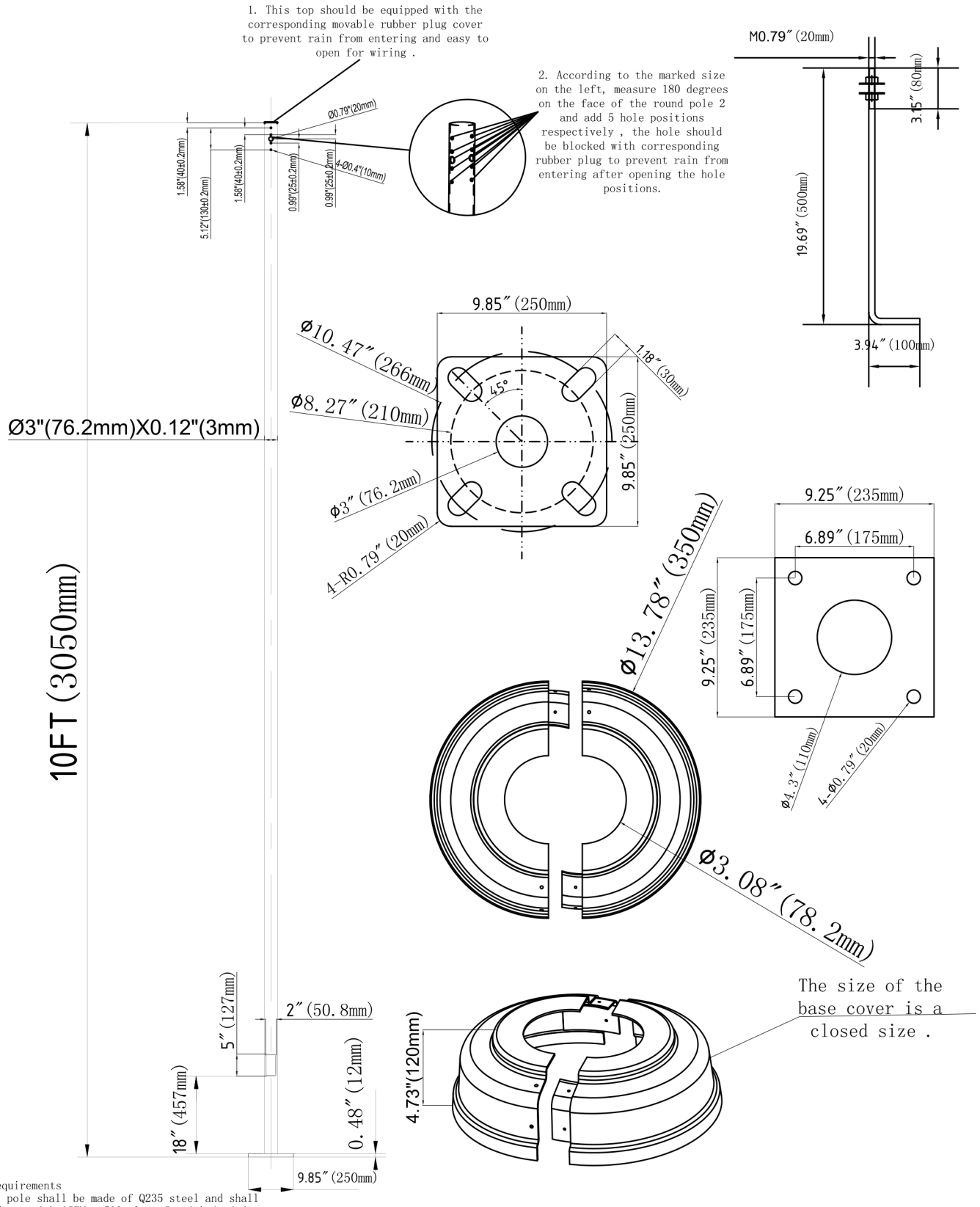

Technical requirements

1. The light pole shall be made of Q235 steel and shall be in accordance with ASTM a-500 class C, with A minimum yield strength of 50,000 psi. The surface and inside of the light pole shall be dipped in zinc and then sprayed on the surface. Failed to chamfer 0.5MM.

2. All welding (electrode) shall be full, and there shall be no false welding, burr or other defects.
3. The unmarked tolerance shall be executed according to the common tolerance table.
4. Meet RoHS standards.

			edition	Modifier		Time of modification	Repair the interior	
Material No.	312.0417	Edition	A/1	Page	1/1	Tolerance requirements:(tolerance without special requirements)		Date
Material Name		proportion	1:1	Angle		NO ±0.2	mapping	
Specification Description		unit	mm			.x ±0.1	check	
Drawing Number		material quality				.xx ±0.05		
						.xxx±0.015	examine and verify	